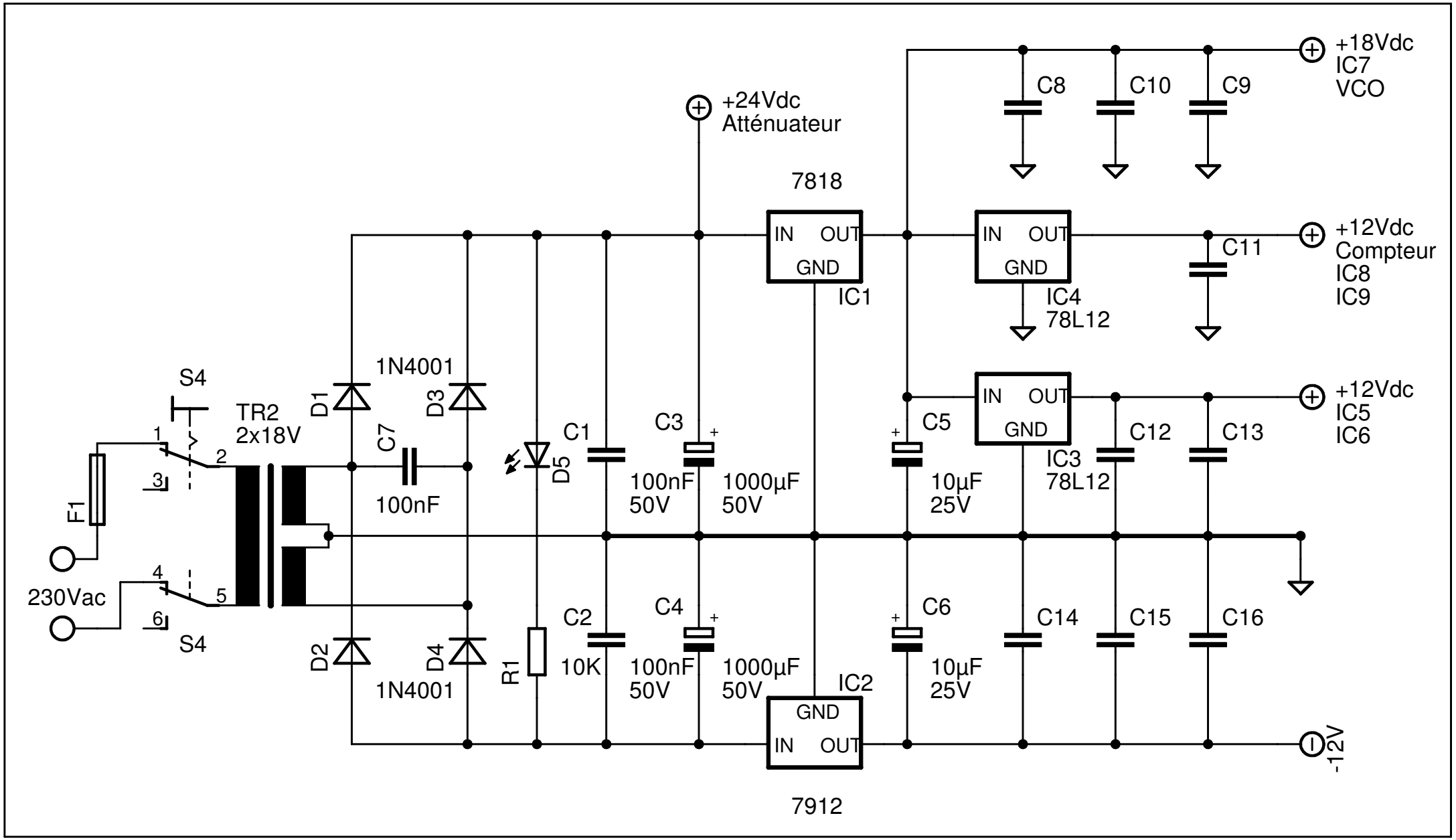
+18Vdc
IC7
VCO
C8
C10
C9
+24Vdc
Atténuateur
7818
IN
OUT
GND
IC1
IN
OUT
GND
IC4
78L12
C11
+12Vdc
Compteur
IC8
IC9
S4
1N4001
D1
D3
TR2
2x18V
C7
100nF
C1
C3
100nF
50V
1000µF
50V
D5
C5
10µF
25V
IN
OUT
GND
IC3
78L12
C12
C13
+12Vdc
IC5
IC6
F1
230Vac
S4
D2
D4
1N4001
R1
10K
C2
C4
100nF
50V
1000µF
50V
C6
10µF
25V
C14
C15
C16
IC2
GND
IN
OUT
-12V
7912