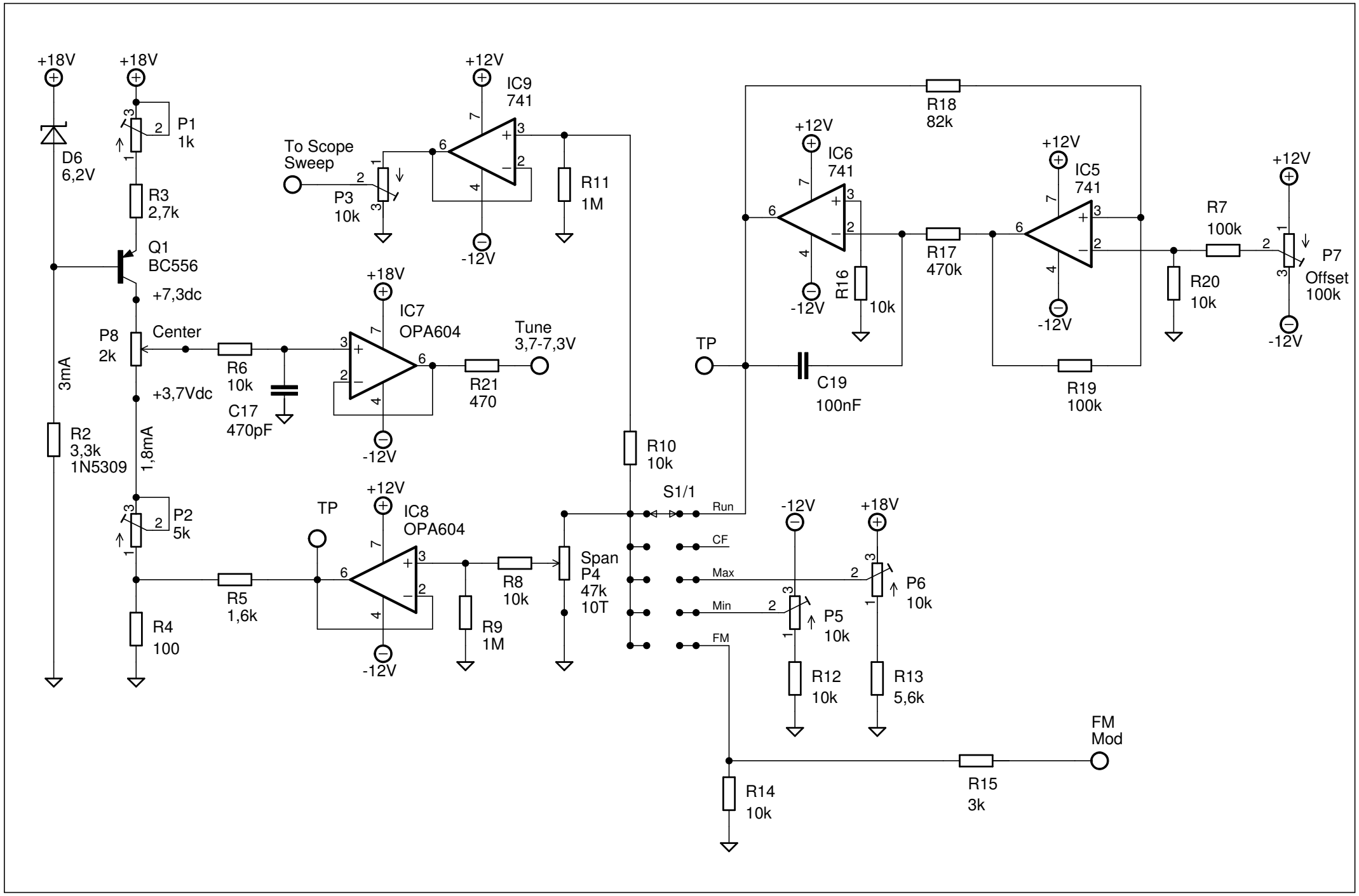
+18V
+18V
D6
6,2V
P1
1k
R3
2,7k
Q1
BC556
+7,3dc
P8
2k
Center
+3,7Vdc
3mA
R2
3,3k
1N5309
1,8mA
P2
5k
R4
100
To Scope
Sweep
P3
10k
+12V
IC9
741
-12V
R11
1M
+18V
IC7
OPA604
R6
10k
C17
470pF
-12V
Tune
3,7-7,3V
R21
470
R10
10k
TP
+12V
IC8
OPA604
R5
1,6k
R8
10k
R9
1M
-12V
Span
P4
47k
10T
S1/1
Run
CF
Max
Min
FM
-12V
+18V
P6
10k
P5
10k
R12
10k
R13
5,6k
R14
10k
R15
3k
FM
Mod
R18
82k
+12V
IC6
741
R16
10k
-12V
R17
470k
+12V
IC5
741
-12V
R19
100k
R20
10k
R7
100k
+12V
P7
Offset
100k
-12V
TP
C19
100nF