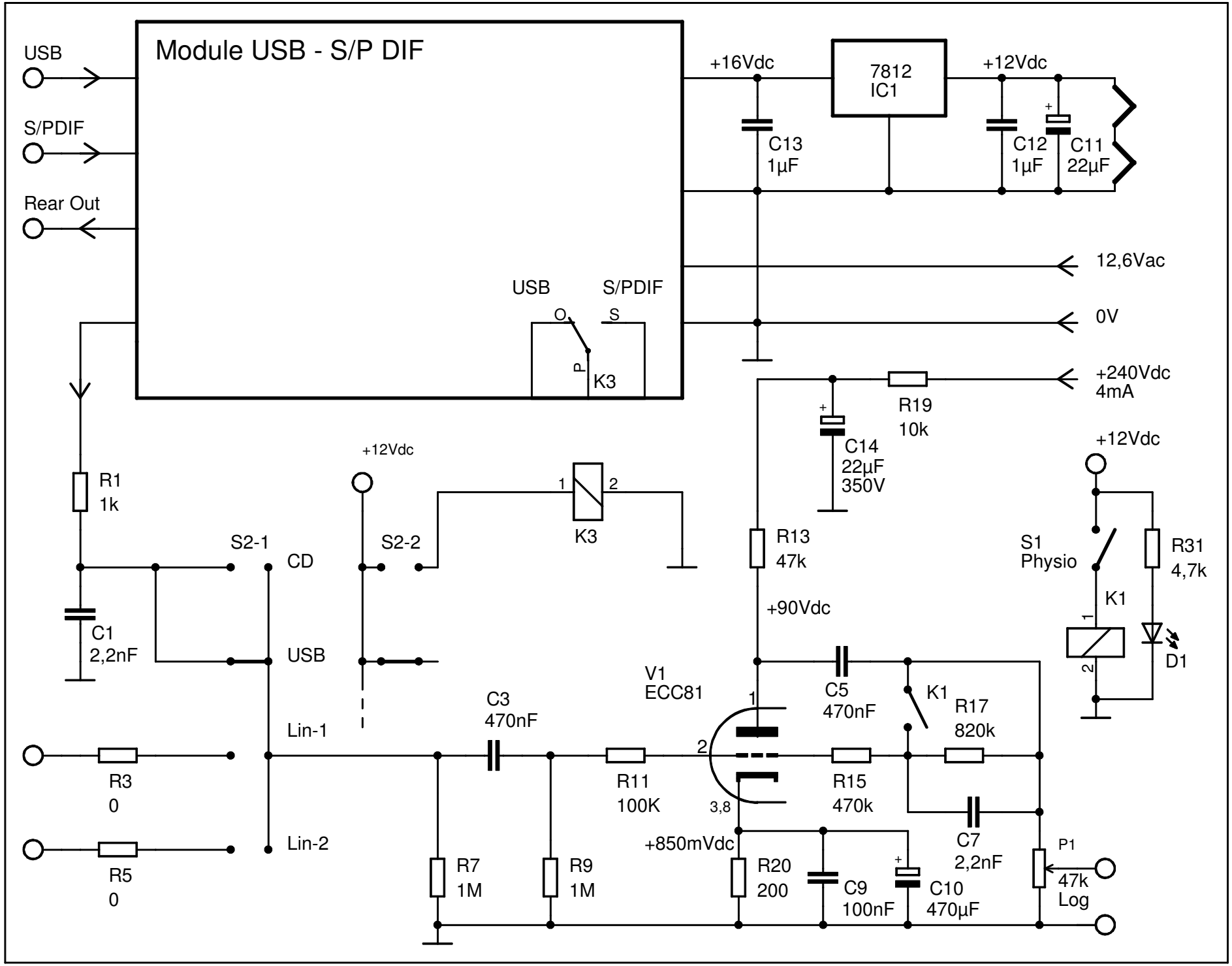

12/07/2012 13:59:35 f=1.50 E:_Program Files Bis\CAD\EAGLE-4.13\projects\P13 Préampli DAC ECC81\Préampli DAC ECC81-ed3.sch (Sheet: 1/1)