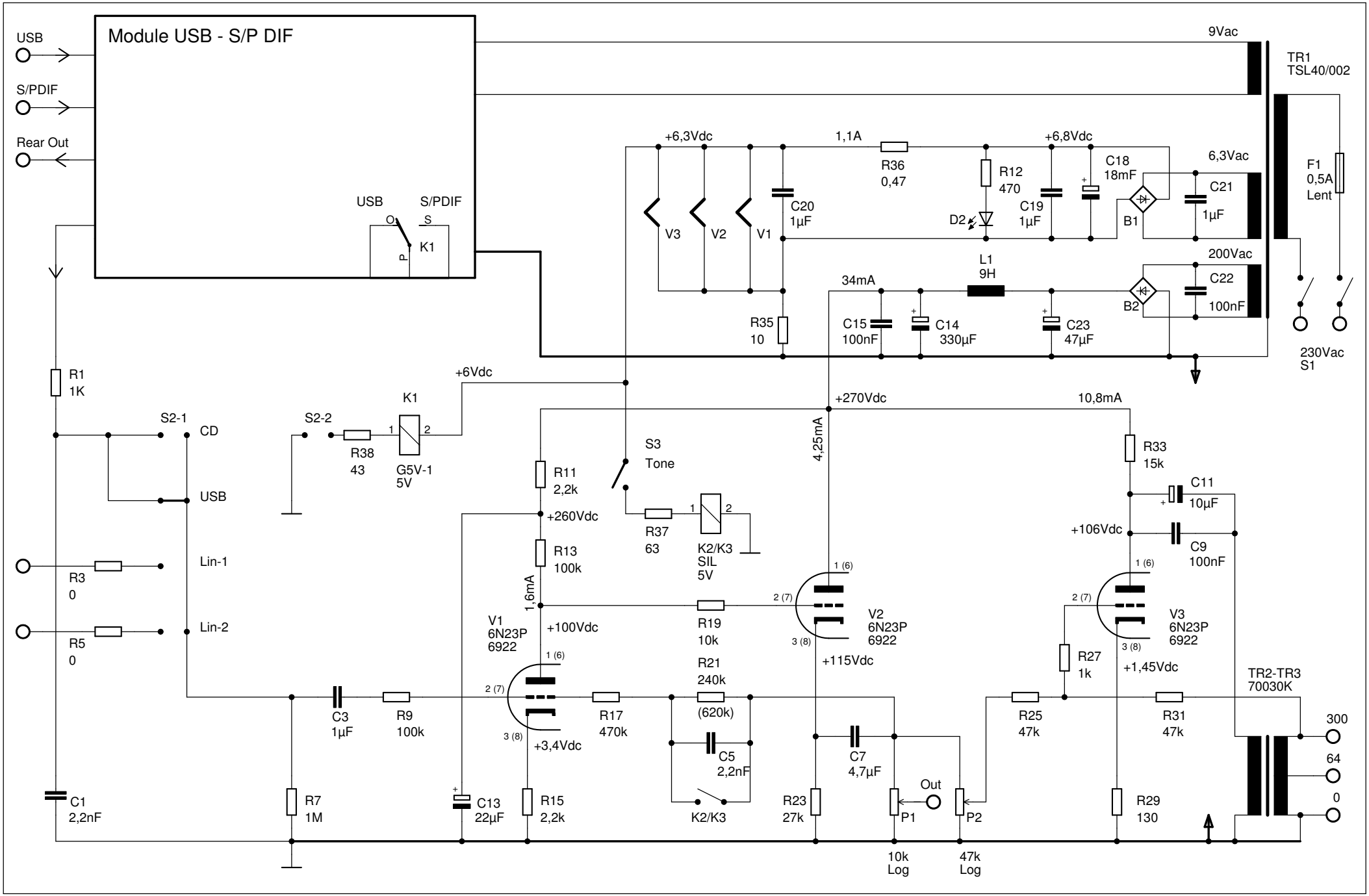
Module USB - S/P DIF
USB
S/PDIF
Rear Out
USB
S/PDIF
O
S
P
K1
9Vac
TR1
TSL40/002
+6,3Vdc
1,1A
R36
0,47
+6,8Vdc
R12
470
C18
18mF
6,3Vac
F1
0,5A
Lent
C20
1µF
C19
1µF
C21
1µF
V3
V2
V1
D2
B1
L1
9H
200Vac
34mA
C22
100nF
B2
R35
10
C15
100nF
C14
330µF
C23
47µF
230Vac
S1
R1
1K
+6Vdc
K1
+270Vdc
10,8mA
S2-1
CD
S2-2
R38
43
G5V-1
5V
S3
Tone
4,25mA
R33
15k
R11
2,2k
C11
10µF
USB
+260Vdc
R37
63
K2/K3
SIL
5V
+106Vdc
C9
100nF
R13
100k
Lin-1
R3
0
1,6mA
V1
6N23P
6922
+100Vdc
R19
10k
V2
6N23P
6922
+115Vdc
V3
6N23P
6922
+1,45Vdc
Lin-2
R5
0
R21
240k
R27
1k
TR2-TR3
70030K
C3
1µF
R9
100k
R17
470k
(620k)
R25
47k
R31
47k
300
+3,4Vdc
C5
2,2nF
C7
4,7µF
64
Out
C1
2,2nF
R7
1M
C13
22µF
R15
2,2k
K2/K3
R23
27k
P1
P2
R29
130
0
10k
Log
47k
Log