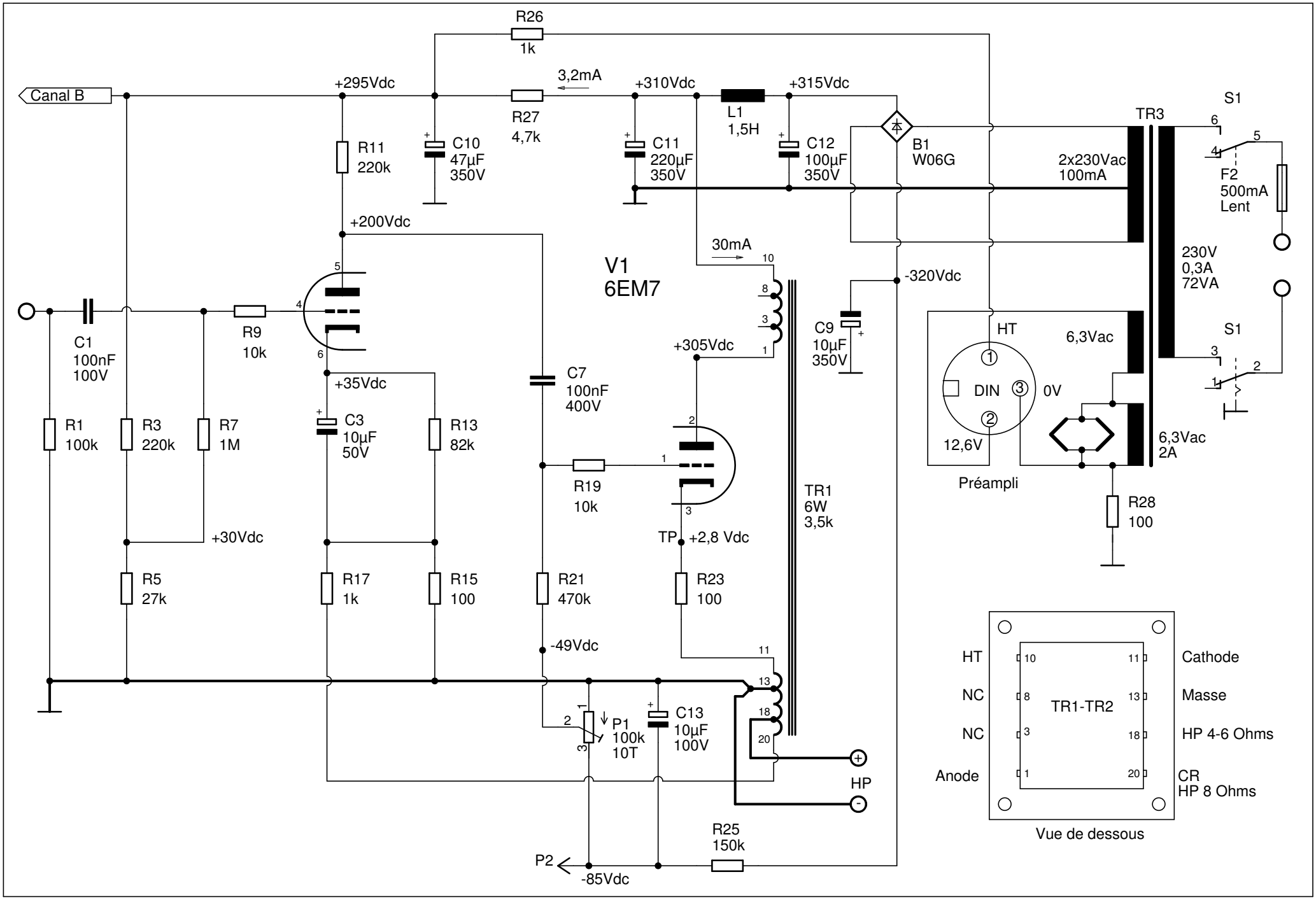
Canal B
R26
1k
+295Vdc
3,2mA
+310Vdc
+315Vdc
R27
4,7k
L1
1,5H
C10
47µF
350V
C11
220µF
350V
C12
100µF
350V
B1
W06G
TR3
S1
2x230Vac
100mA
F2
500mA
Lent
R11
220k
+200Vdc
30mA
V1
6EM7
-320Vdc
230V
0,3A
72VA
C1
100nF
100V
R9
10k
C9
10µF
350V
+305Vdc
HT
6,3Vac
DIN
0V
12,6V
Préampli
+35Vdc
C7
100nF
400V
C3
10µF
50V
R13
82k
R1
100k
R3
220k
R7
1M
R19
10k
TR1
6W
3,5k
6,3Vac
2A
R28
100
+30Vdc
TP
+2,8 Vdc
R5
27k
R17
1k
R15
100
R21
470k
R23
100
-49Vdc
P1
100k
10T
C13
10µF
100V
HP
R25
150k
P2
-85Vdc
HT
NC
NC
Anode
TR1-TR2
Cathode
Masse
HP 4-6 Ohms
CR
HP 8 Ohms
Vue de dessous