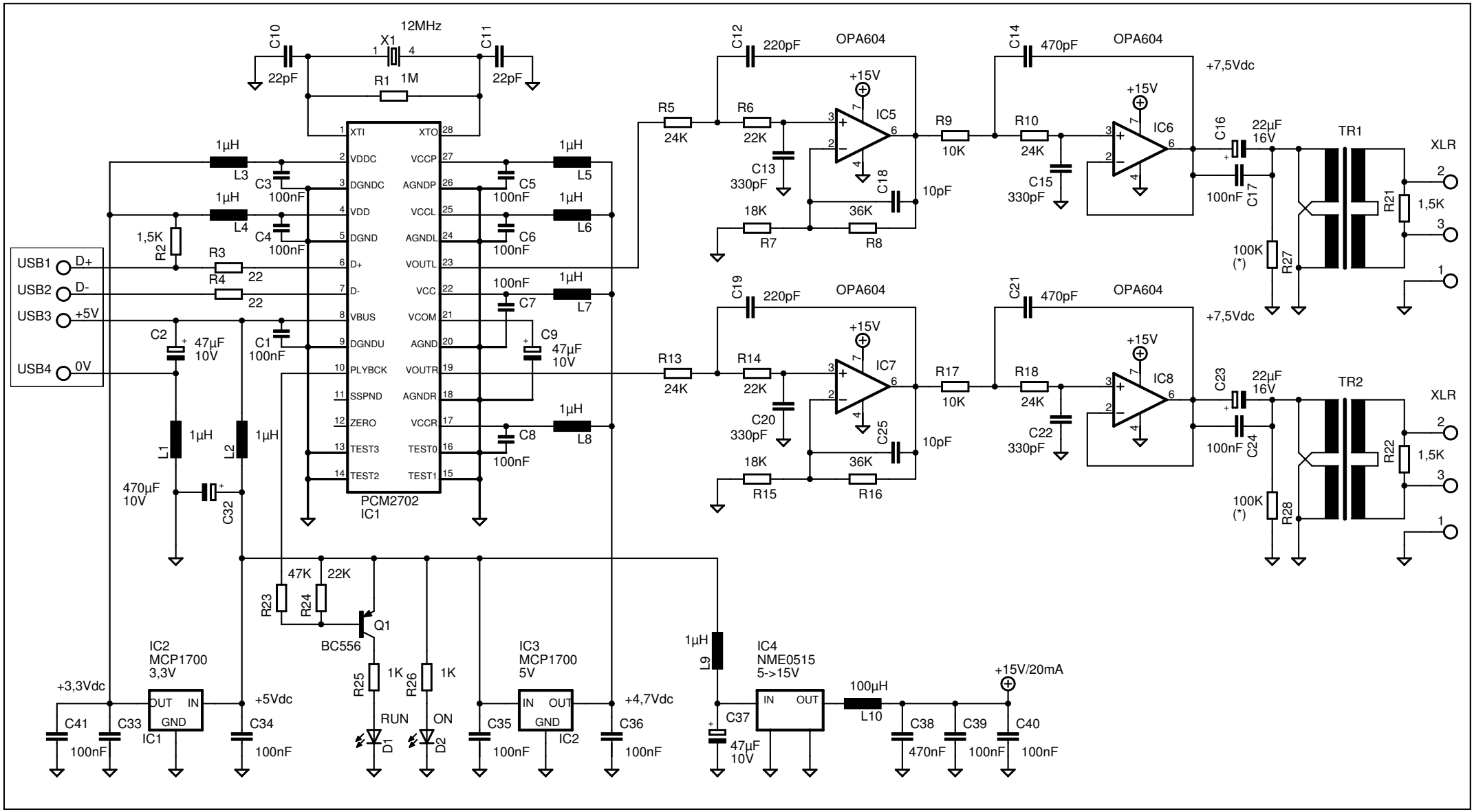
12MHz
X1
C10
22pF
C11
22pF
R1 1M
PCM2702
IC1
XTI
XTO
VDDC
VCCP
DGNDC
AGNDP
VDD
VCCL
DGND
AGNDL
D+
VOUTL
D-
VCC
VBUS
VCOM
DGNDU
AGND
PLYBCK
VOUTR
SSPND
AGNDR
ZERO
VCCR
TEST3
TEST0
TEST2
TEST1
USB1 D+
USB2 D-
USB3 +5V
USB4 0V
R2 1,5K
R3 22
R4 22
C1 100nF
C2 47µF 10V
C3 100nF
C4 100nF
C5 100nF
C6 100nF
C7 100nF
C8 100nF
C9 47µF 10V
L1 1µH
L2 1µH
L3 1µH
L4 1µH
L5 1µH
L6 1µH
L7 1µH
L8 1µH
C32 470µF 10V
R23 47K
R24 22K
Q1 BC556
R25 1K
R26 1K
RUN D1
ON D2
IC2 MCP1700 3,3V
+3,3Vdc
+5Vdc
C41 100nF
C33
C34 100nF
IC3 MCP1700 5V
+4,7Vdc
C35 100nF
C36 100nF
L9 1µH
C37 47µF 10V
IC4 NME0515 5->15V
100µH L10
+15V/20mA
C38 470nF
C39 100nF
C40 100nF
R5 24K
R6 22K
C12 220pF
OPA604
IC5
+15V
C13 330pF
C18 10pF
R7 18K
R8 36K
R9 10K
C14 470pF
OPA604
IC6
R10 24K
C15 330pF
+7,5Vdc
C16 22µF 16V
C17 100nF
R27 100K (*)
TR1
R21 1,5K
XLR
R13 24K
R14 22K
C19 220pF
OPA604
IC7
C20 330pF
C25 10pF
R15 18K
R16 36K
R17 10K
C21 470pF
OPA604
IC8
R18 24K
C22 330pF
+7,5Vdc
C23 22µF 16V
C24 100nF
R28 100K (*)
TR2
R22 1,5K
XLR