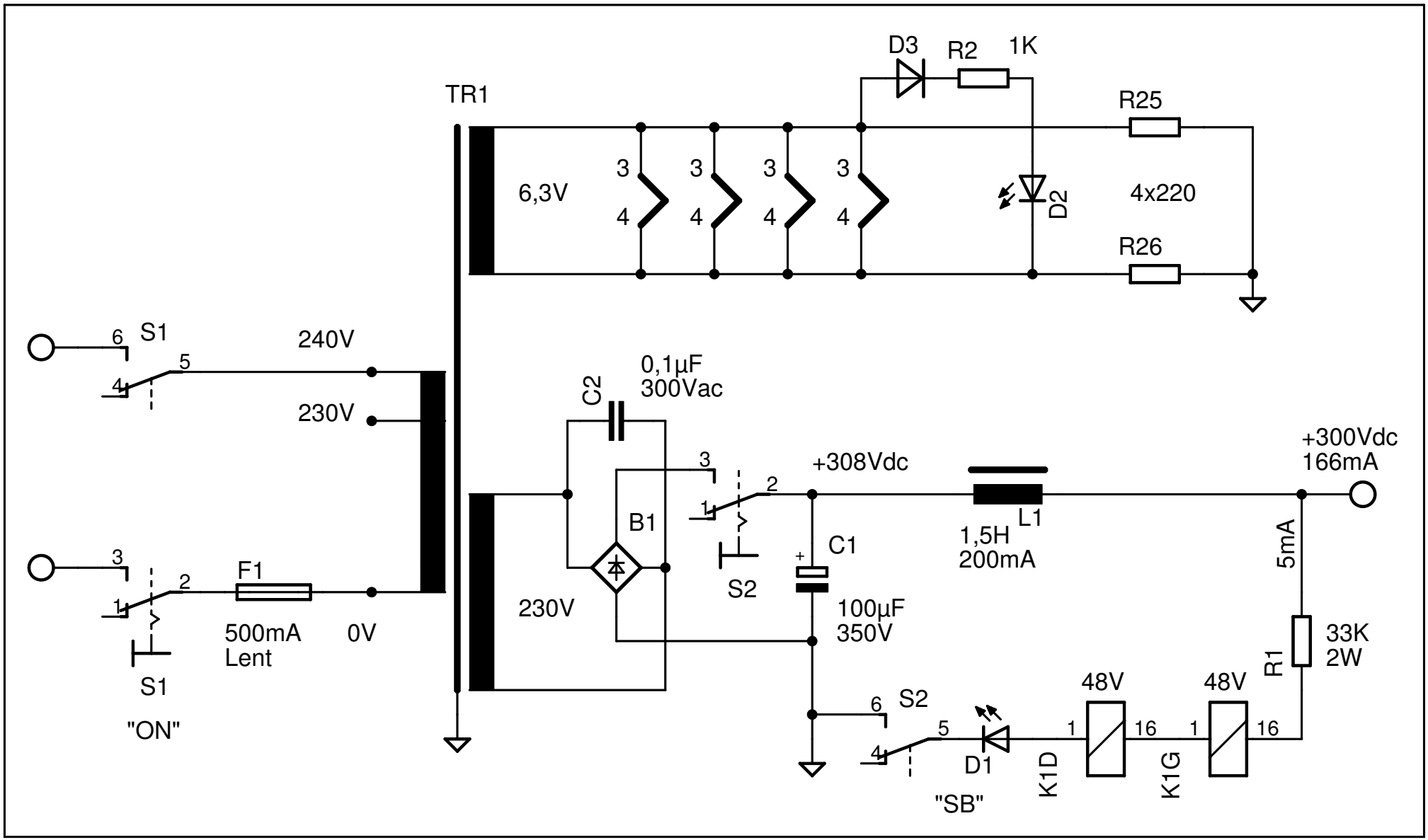
D3
R2
1K
TR1
R25
6,3V
3
4
D2
4x220
R26
S1
240V
230V
C2
0,1µF
300Vac
+308Vdc
+300Vdc
166mA
B1
L1
1,5H
200mA
C1
S2
5mA
F1
500mA
Lent
0V
230V
100µF
350V
33K
2W
R1
48V
S1
"ON"
S2
D1
K1D
K1G
"SB"