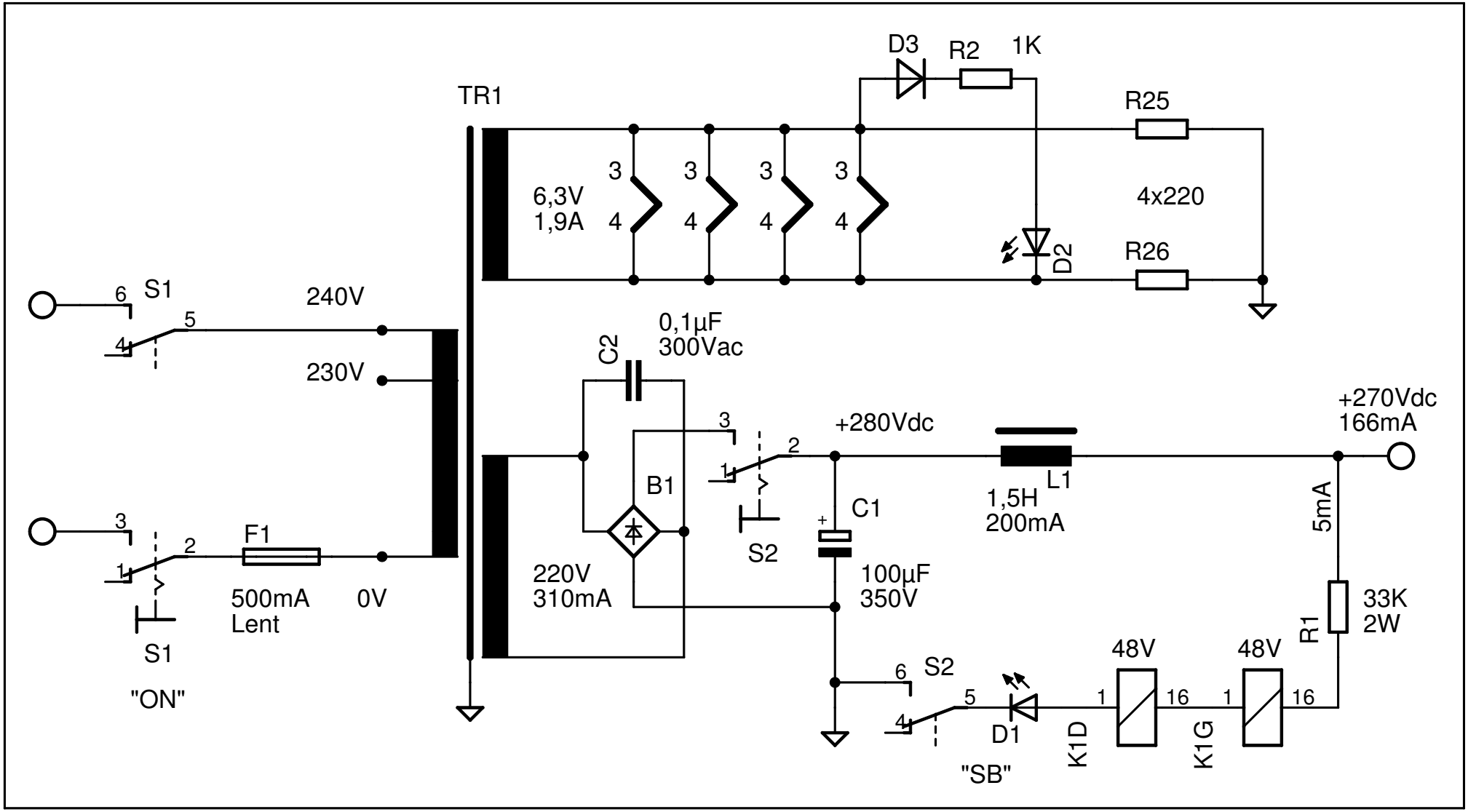
D3
R2
1K
TR1
R25
6,3V
1,9A
3
4
4x220
D2
R26
S1
240V
230V
0,1µF
300Vac
C2
+280Vdc
+270Vdc
166mA
B1
L1
1,5H
200mA
C1
5mA
F1
S2
220V
310mA
100µF
350V
33K
2W
R1
500mA
Lent
0V
S1
"ON"
48V
48V
S2
D1
K1D
K1G
"SB"