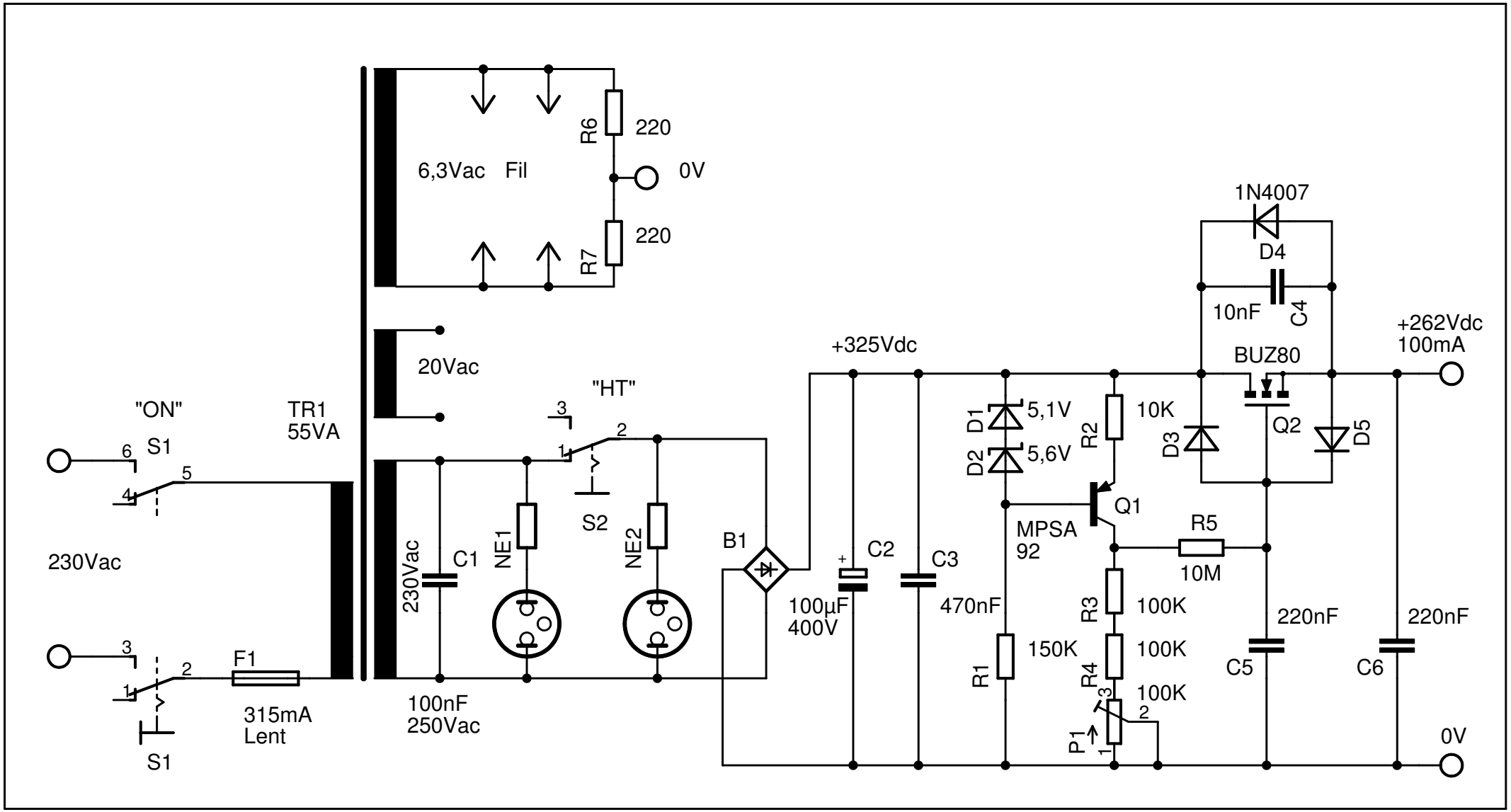
6,3Vac Fil
R6
220
0V
R7
220
20Vac
"ON"
S1
TR1
55VA
230Vac
F1
315mA
Lent
S1
230Vac
C1
100nF
250Vac
NE1
"HT"
S2
NE2
B1
+325Vdc
C2
100µF
400V
C3
470nF
D1
5,1V
D2
5,6V
R2
10K
MPSA
92
Q1
R1
150K
R3
100K
R4
100K
P1
100K
R5
10M
1N4007
D4
10nF
C4
BUZ80
Q2
D3
D5
+262Vdc
100mA
220nF
C5
220nF
C6
0V