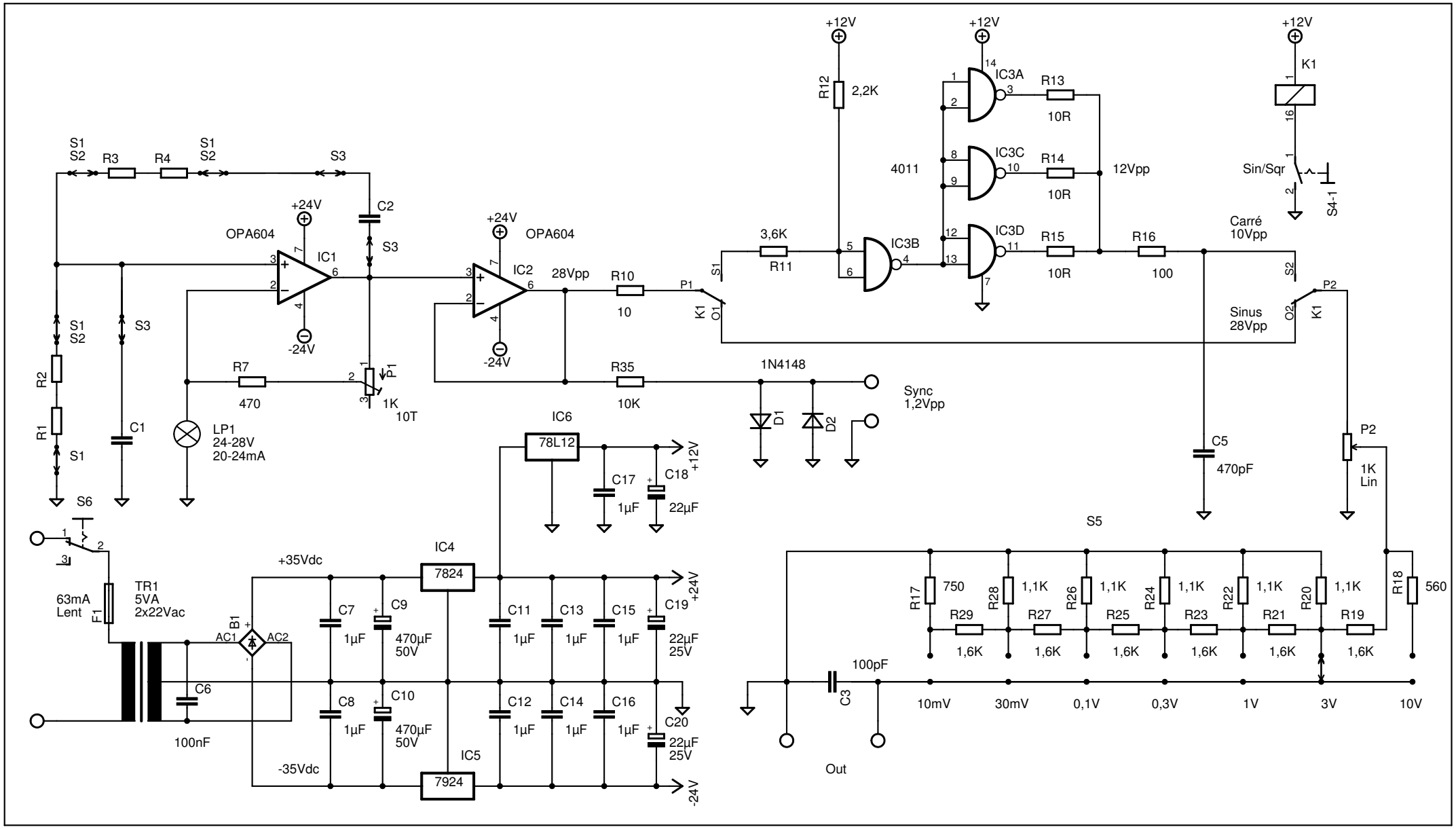

07/01/2008 11:20:00 E:\Program Files Bis\CAD\EAGLE-4.13\projects\LG2 Generateur Audio\Generateur-ed6.sch (Sheet: 1/1)