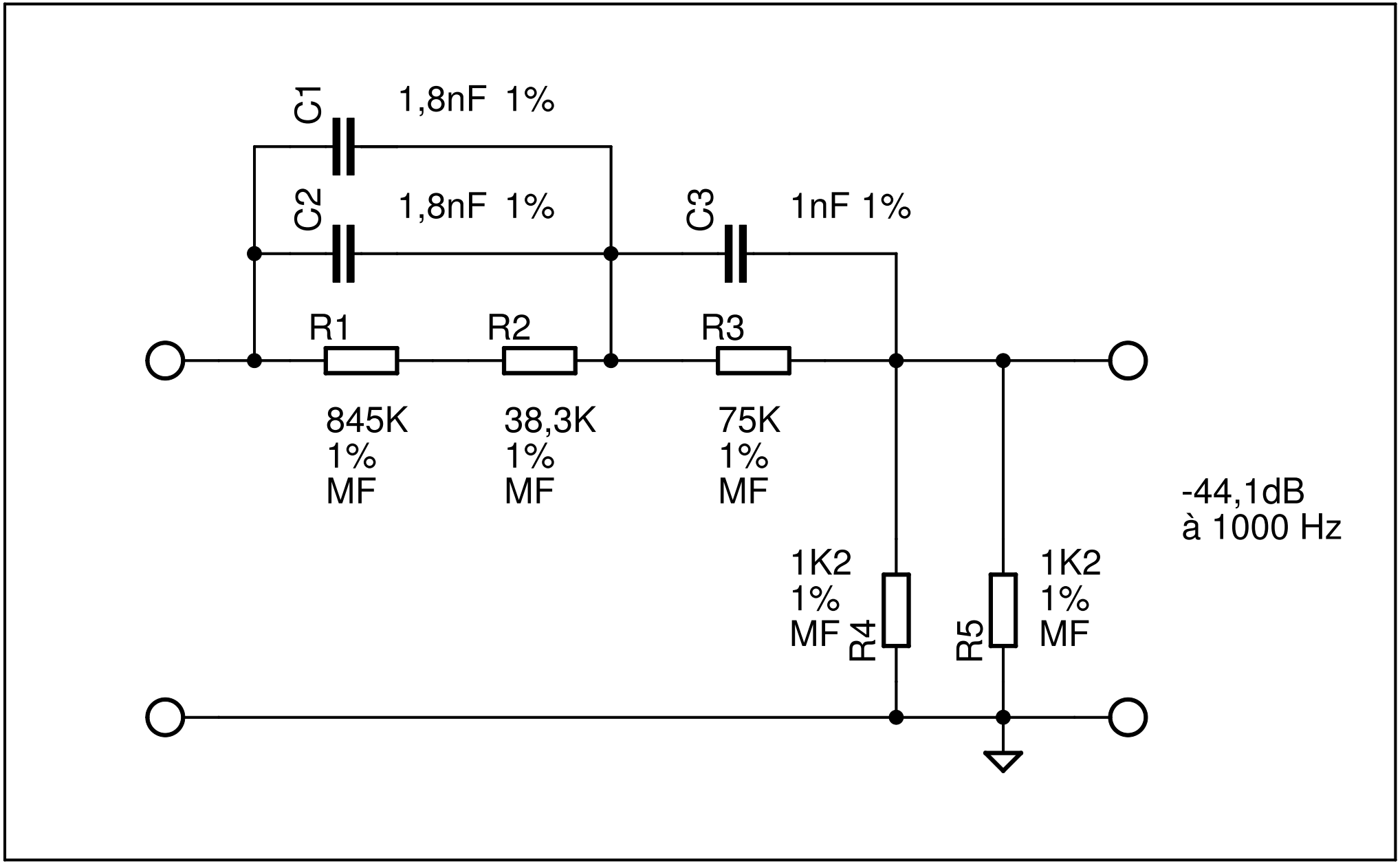
C1
1,8nF 1%
C2
1,8nF 1%
C3
1nF 1%
R1
R2
R3
845K
1%
MF
38,3K
1%
MF
75K
1%
MF
-44,1dB
à 1000 Hz
1K2
1%
MF
R4
R5
1K2
1%
MF