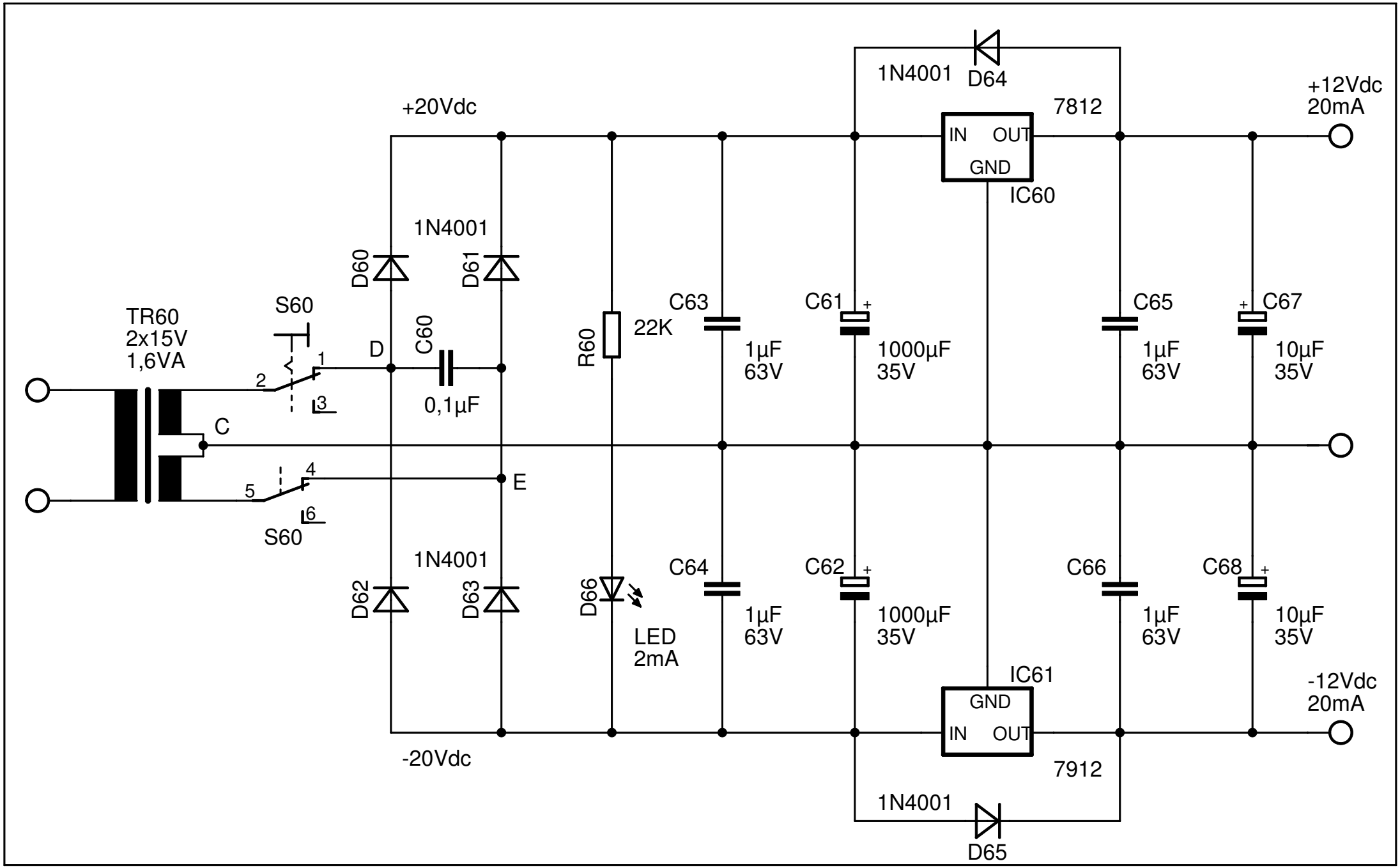

09/09/2006 11:25:27 f=1.80 D:\Program Files Bis\CAD\EAGLE-4.13\projects\RIAA New\RIAA Alim.sch (Sheet: 1/1)