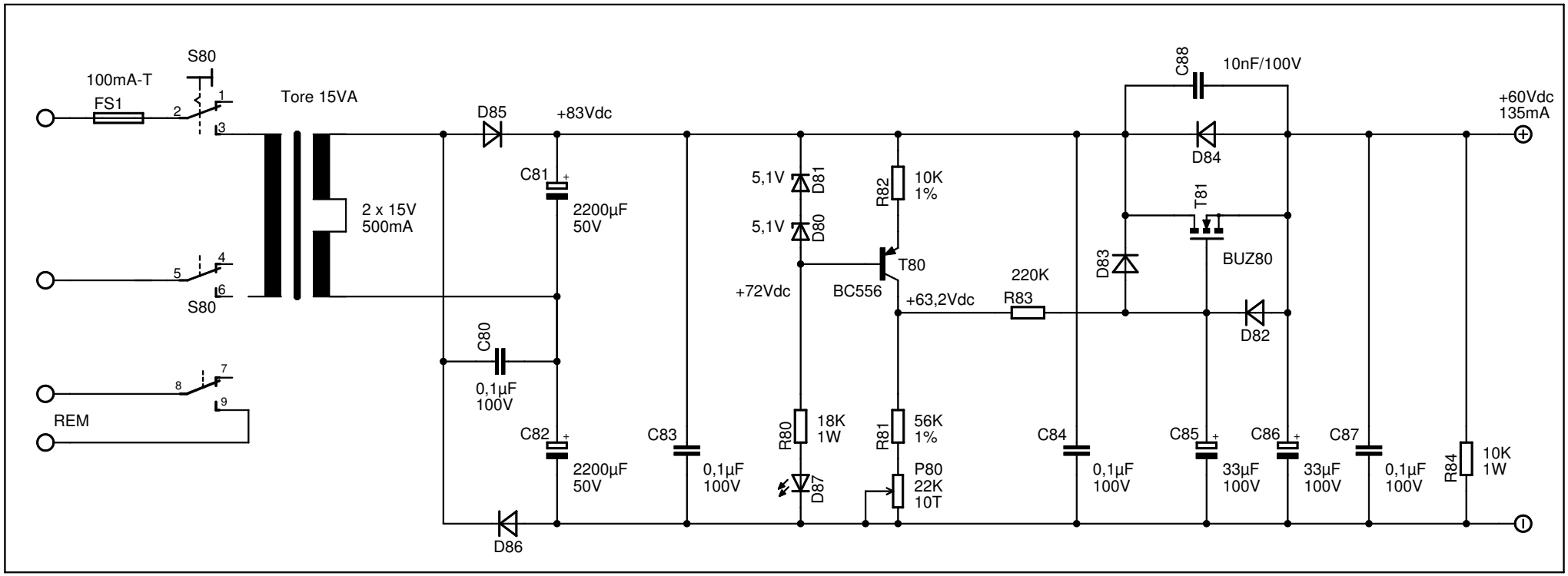
100mA-T
FS1
S80
1
2
3
4
5
6
7
8
9
S80
REM
Tore 15VA
2 x 15V
500mA
D85
+83Vdc
C81
2200µF
50V
C80
0,1µF
100V
C82
2200µF
50V
D86
C83
0,1µF
100V
5,1V
D81
5,1V
D80
+72Vdc
R80
18K
1W
D87
R82
10K
1%
T80
BC556
+63,2Vdc
R81
56K
1%
P80
22K
10T
220K
R83
C84
0,1µF
100V
C88
10nF/100V
D84
T81
BUZ80
D83
D82
C85
33µF
100V
C86
33µF
100V
C87
0,1µF
100V
R84
10K
1W
+60Vdc
135mA