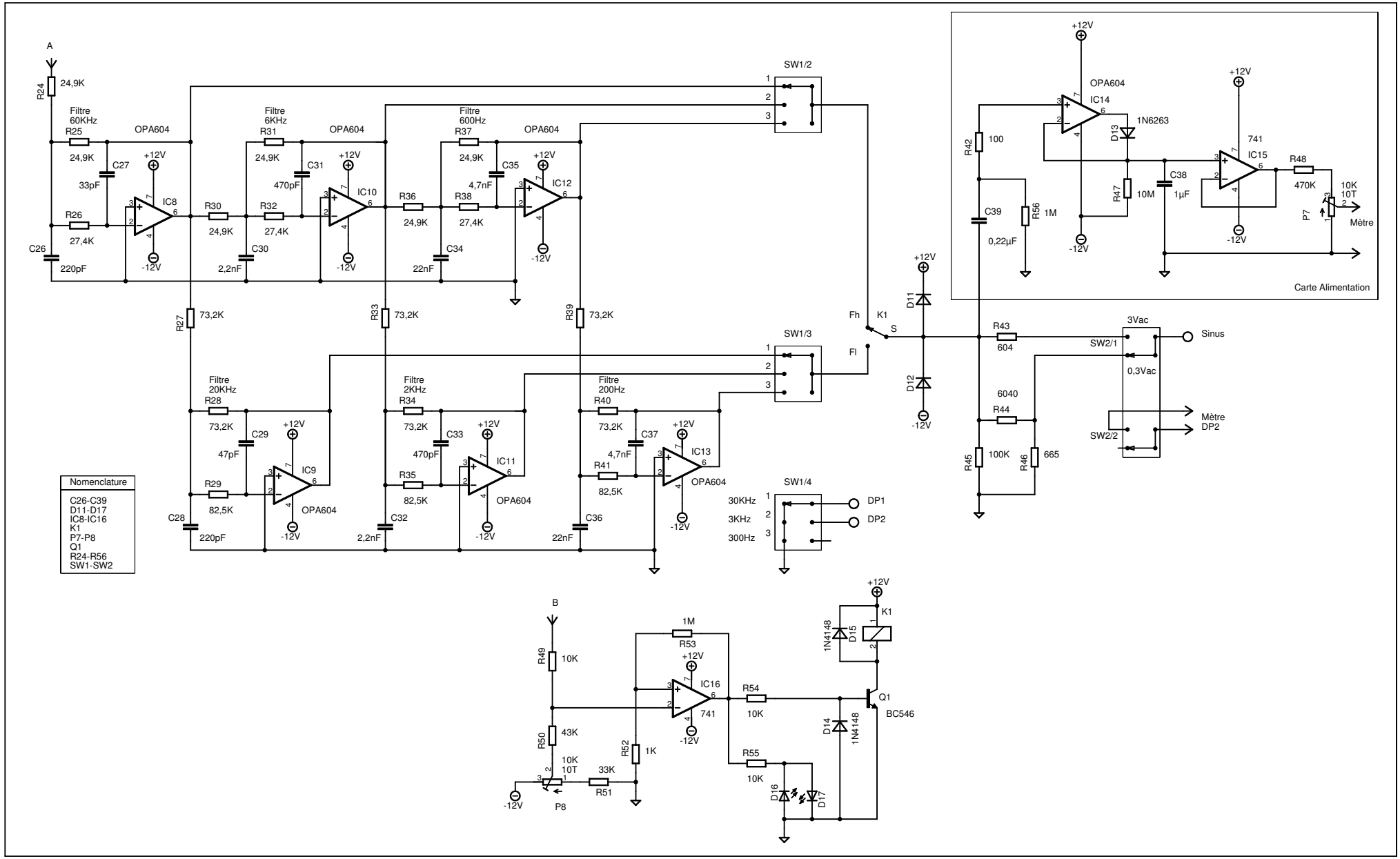

15/09/2005 14:15:40 f=0.70 D:\Program Files Bis\CAD\EAGLE-4.13\projects\Generateur audio\Generateur Filtres-LED.sch (Sheet: 1/1)