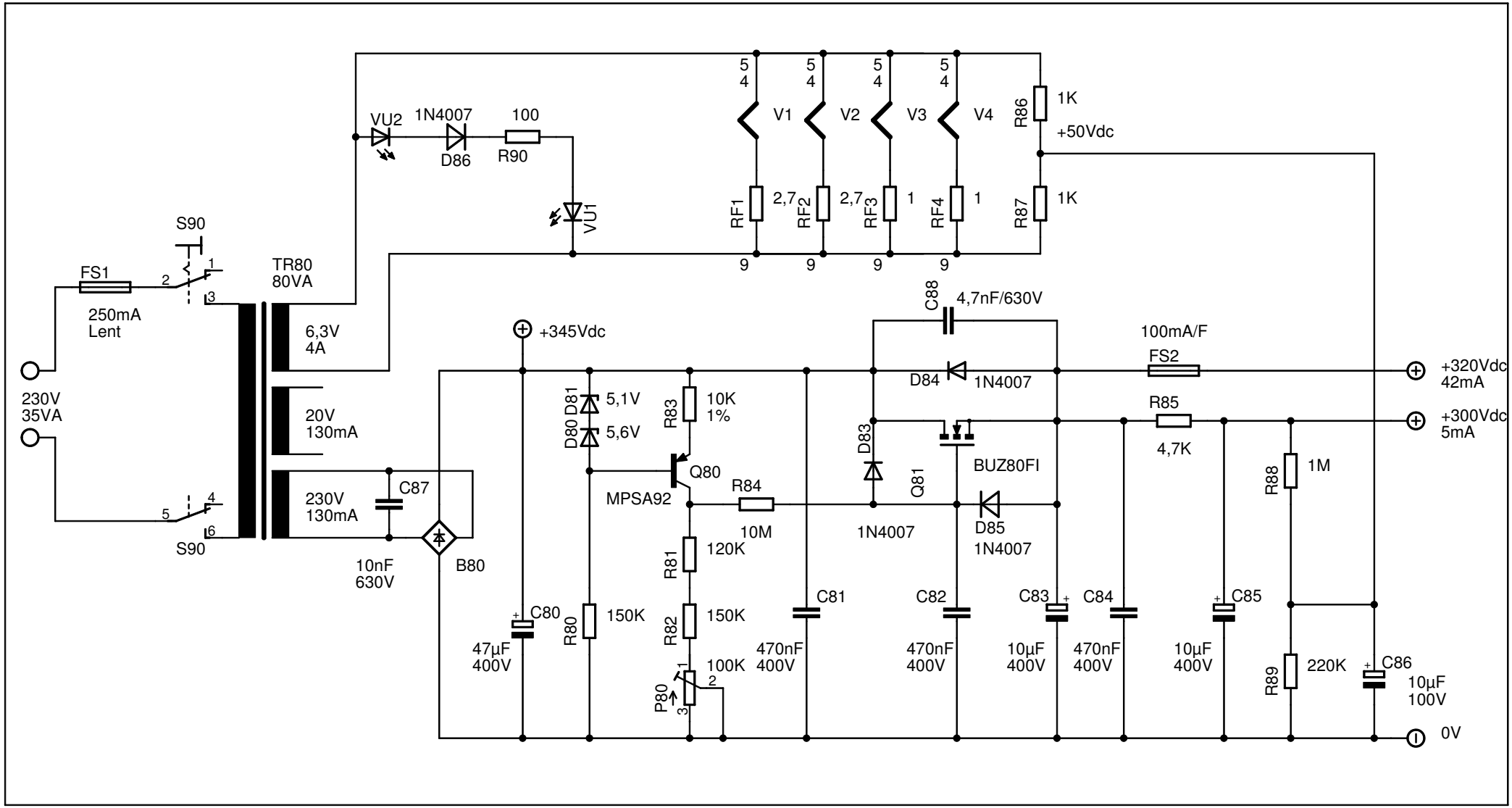

22/07/2011 12:07:32 f=1.20 F:_Program Files Bis\CAD\EAGLE-4.13\projects\A3 PP ECC99\A3 PS ed4.sch (Sheet: 1/1)