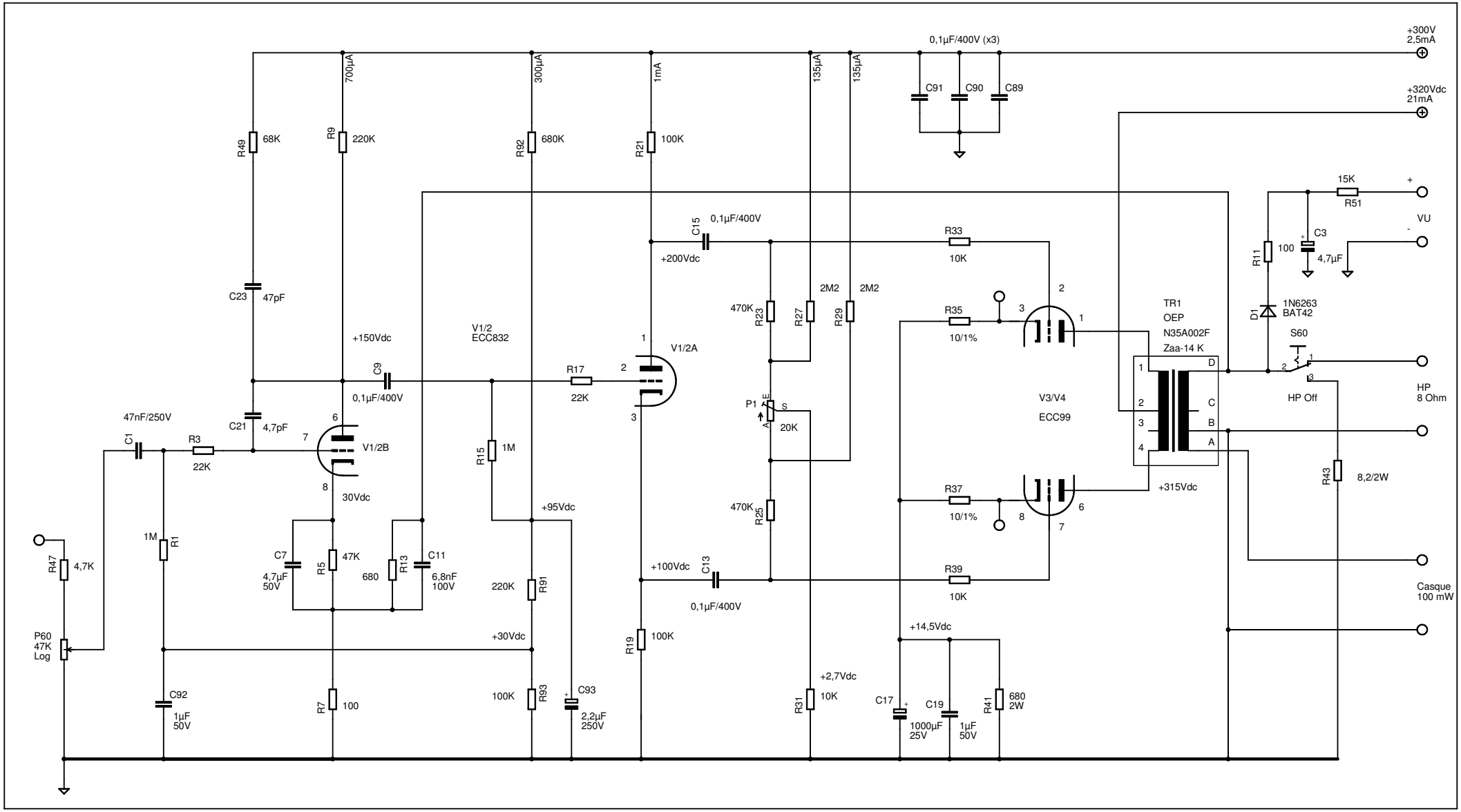

22/07/2011 11:57:09 f=0.75 F:_Program Files Bis\CAD\EAGLE-4.13\projects\A3 PP ECC99\A3 ECC99 ed7.sch (Sheet: 1/1)