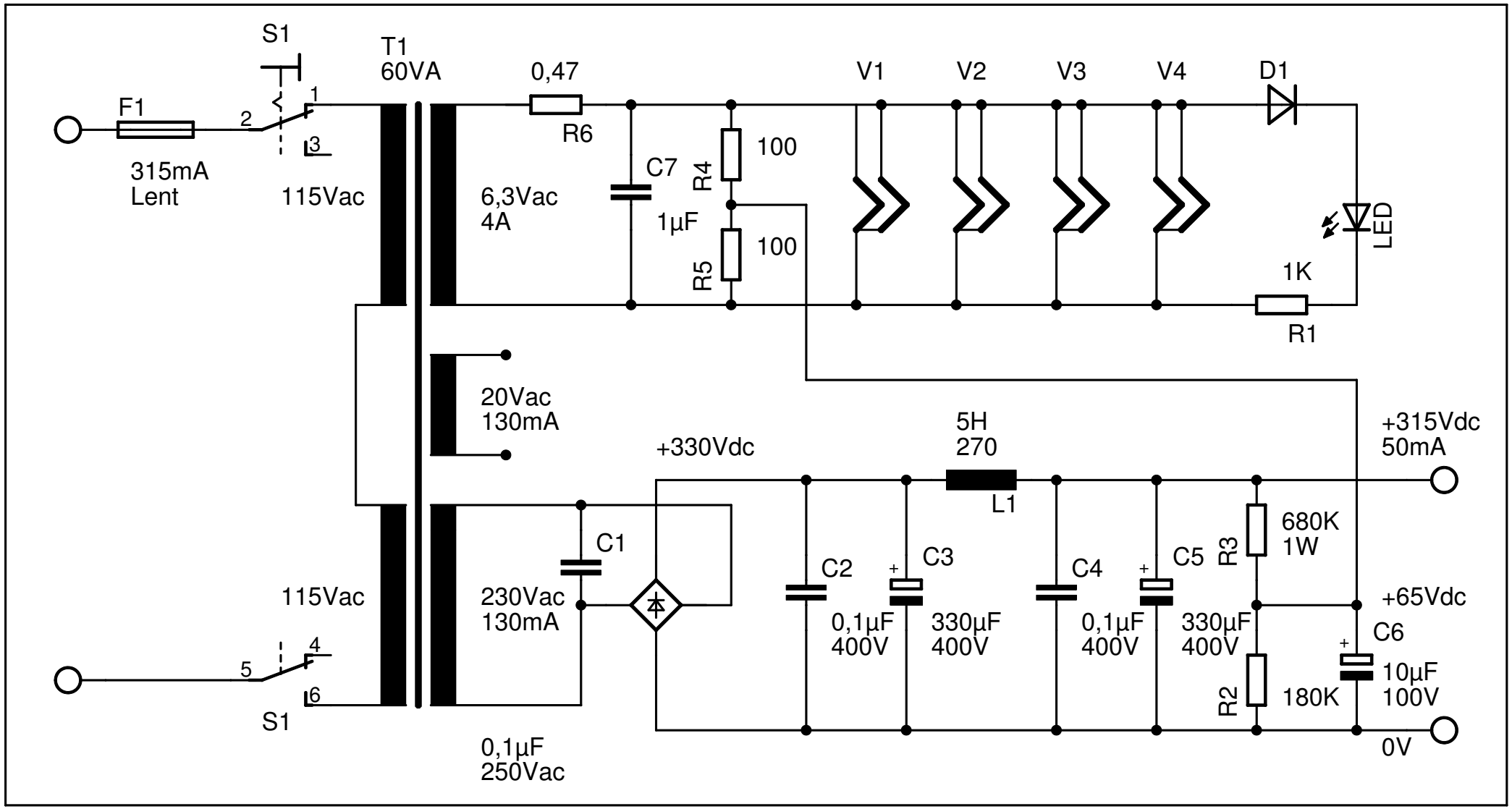
S1
T1
60VA
0,47
V1
V2
V3
V4
D1
F1
R6
315mA
Lent
115Vac
6,3Vac
4A
C7
1µF
R4
100
R5
100
LED
1K
R1
20Vac
130mA
+330Vdc
5H
270
L1
+315Vdc
50mA
C1
C2
C3
C4
C5
R3
680K
1W
115Vac
230Vac
130mA
0,1µF
400V
330µF
400V
0,1µF
400V
330µF
400V
+65Vdc
C6
10µF
100V
R2
180K
S1
0,1µF
250Vac
0V